Greenhouse Management Design

Jane Marie Pareja

March 26, 2026

Contents

1 Introduction **2**

2 System Overview **3**

3 System Workflow **4**

4 Database Design - ERD **4**

5 Use Case Diagram **6**

6 Wireframes - User Interface Design **7**

6.1 Dashboard Wireframe 7

6.2 Mobile View Wireframe 8

7 Conclusion **8**

1 Introduction

This document describes the design of a greenhouse management system that uses IT solutions to monitor and control environmental conditions such as temperature, humidity, soil moisture, and light intensity. The system collects, stores, analyzes, and displays data to improve efficiency and decision-making.

This design was built based on the analysis and describes how the greenhouse system will be visually structured and implemented. It includes system architecture, workflows, and user interface wireframes to clearly show how the system works.

2 System Overview

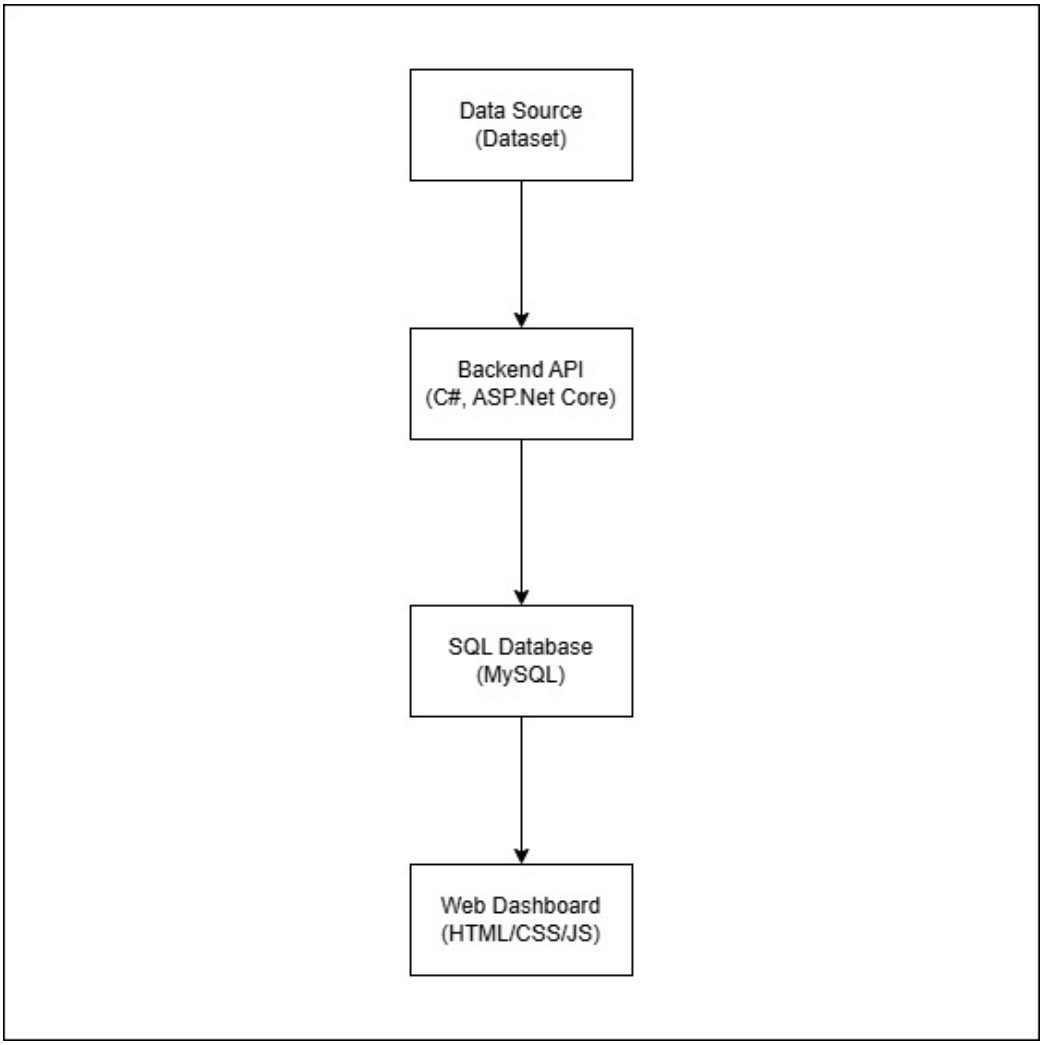

Figure 1: System Architecture Diagram

The system follows a simple layered architecture as shown in Figure 1. The data source layer that collects the data from the dataset. The Backend layer that processes and manages the data. The database layer that stores all the greenhouse data. And the web dashoard layer that displays the data to the users.

3 System Workflow

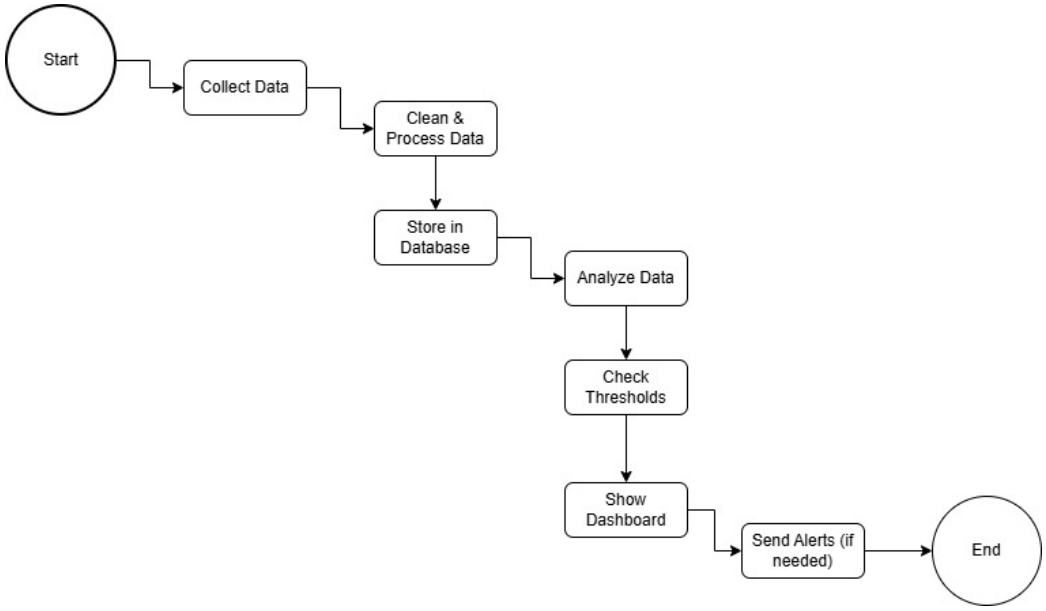

Figure 2: System Workflow Diagram

Figure 2 illustrates the step-by-step workflow for the greenhouse monitoring system. The process begins with collecting and cleaning data before it is securely stored in a database. The system then analyzes the data and checks thresholds to display information on a dashboard and sends alerts if any conditions are outside of the safe limits.

4 Database Design - ERD

1. **Greenhouse**
   This entity represents the physical greenhouse where crops are grown. It stores general information such as the greenhouse name, location, and size. Each greenhouse contains multiple sensors that monitor environmental conditions.

2. **Sensor**
   The Sensor entity represents devices installed inside the greenhouse to collect environmental data. Each sensor has a specific type (e.g., temperature, humidity, soil moisture, light intensity), a location, and a

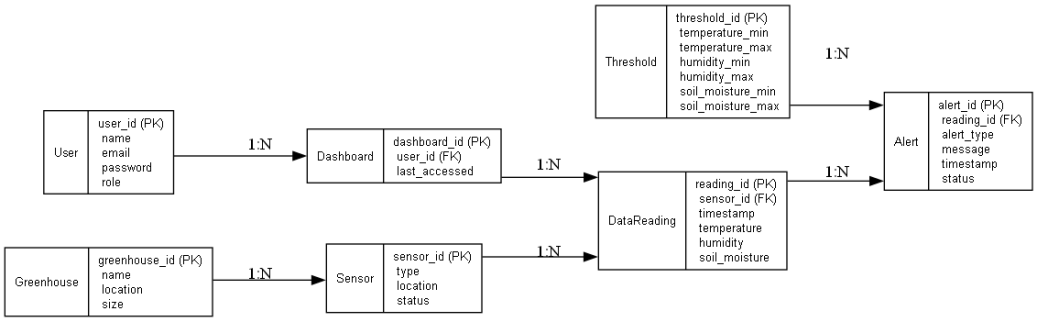

Figure 3: Entity Relation Diagram

status. Sensors are associated with a greenhouse and generate multiple data readings.

3. **DataReading**
   This entity stores the actual environmental data collected by sensors over time. Each record includes values such as temperature, humidity, and soil moisture along with a timestamp. Data readings are used for analysis and monitoring.

4. **Threshold**
   The Threshold entity defines acceptable environmental limits for the greenhouse conditions. It includes minimum and maximum values for temperature, humidity, and soil moisture. These thresholds are used to determine when alerts should be triggered.

5. **Alert**
   The Alert entity represents warnings generated when environmental conditions exceed the predefined thresholds. Each alert is linked to a specific data reading and contains information such as alert type, message, timestamp, and status.

6. **User**
   This entity represents individuals who interact with the system, such as farmers or administrators. It stores user information including name, email, password, and role. Users access the system to monitor and manage greenhouse conditions.

7. **Dashboard**
   The Dashboard entity represents the user interface where environmental data is displayed. It allows users to view real-time and historical

data readings, as well as alerts. Each dashboard is associated with a user.

Please note that the input of the sensors is simulated via a dataset, which eliminates the need to have access to real time data.

5 Use Case Diagram

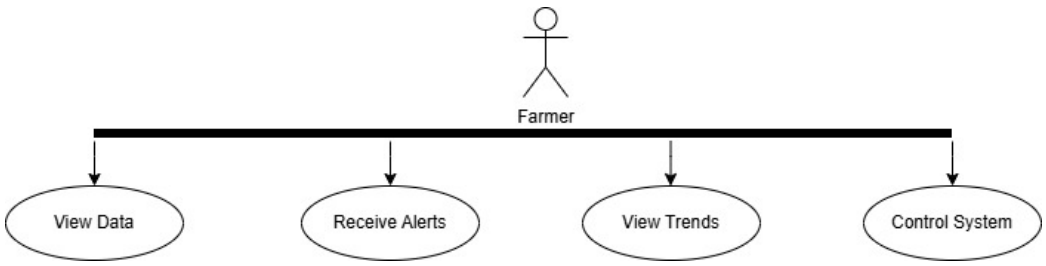

Figure 4: Use Case Diagram

Figure 4 shows how the user (the farmer) interacts with the greenhouse system. It highlights the main actions the user can perform, such as viewing data, receiving alerts, checking trends, and controlling the system.

This diagram helps to clearly show what the system does from the user's perspective and ensures that all important features are included.

6 Wireframes - User Interface Design

6.1 Dashboard Wireframe

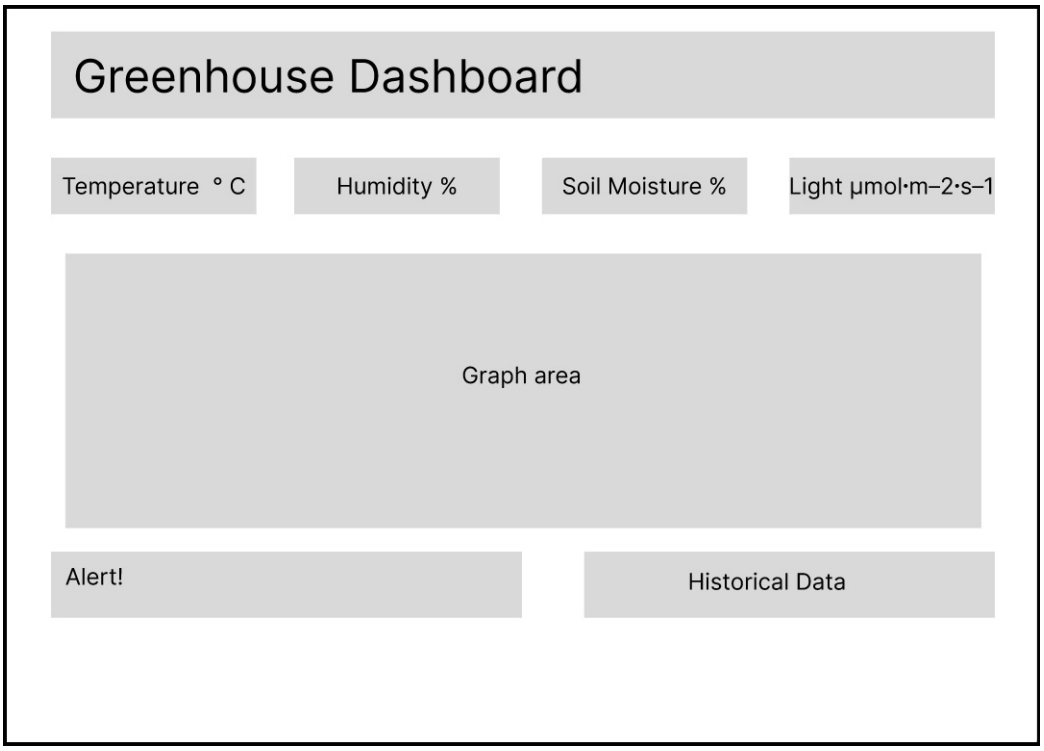

Figure 5: Desktop Wireframe

Figures 5 and 6 illustrates the desktop and mobile view wireframes of the dashboard respectively. Wireframes are simple visual layouts that show how the dashboard will look and how information is arranged on the screen. They display key elements such as real-time data, graphs, and alerts without focusing on design details like colors.

Wireframes help plan the user interface so that it is clear, organized, and easy for farmers to use.

6.2 Mobile View Wireframe

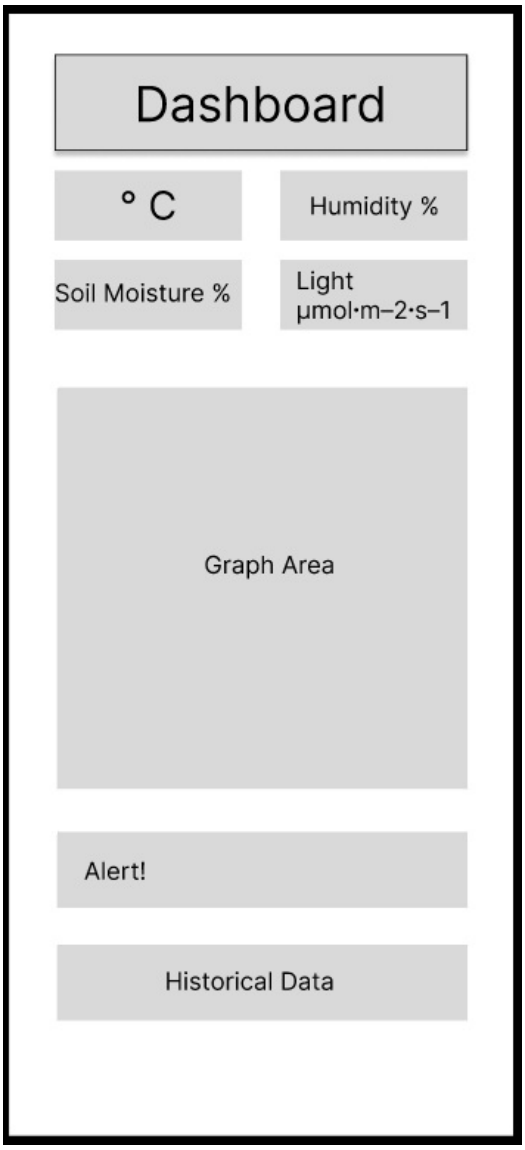

Figure 6: Mobile Wireframe

7 Conclusion

This design provides a clear structure for building the greenhouse system. The diagrams, workflows, and wireframes help visualize how data moves through the system and how users interact with it.